HYDRAULIC CYLINDERS

COMPONENT REPAIR MANUAL

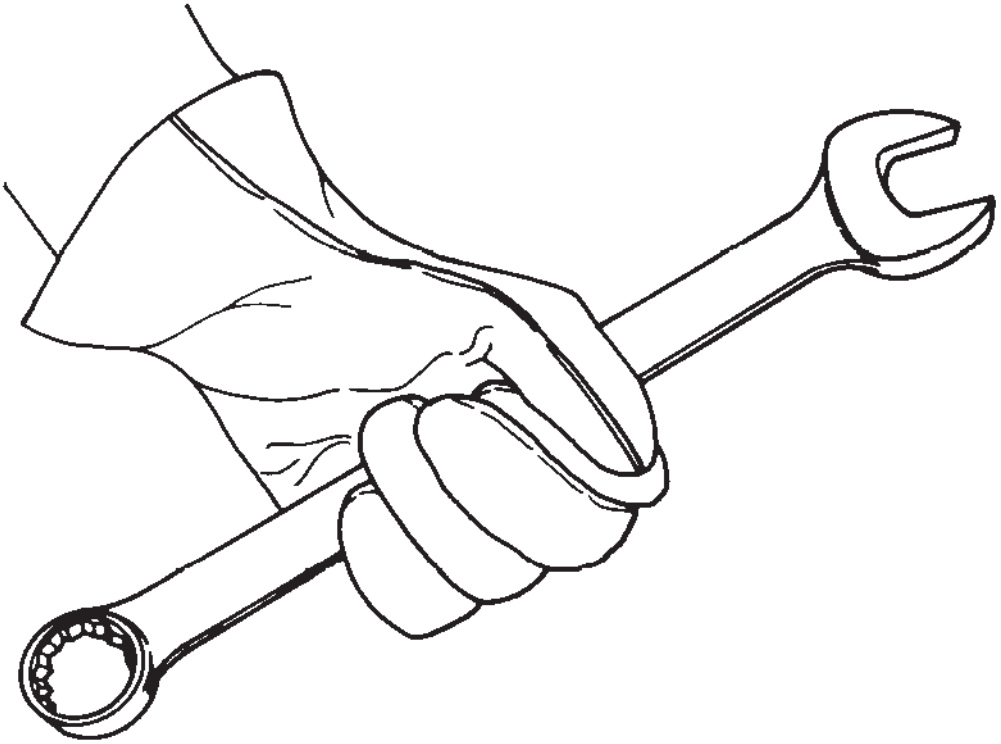

MELROE
INGERSOLL-RAND

6570091 (8–92) Revised (4–98)

© Melroe Company 1998
Printed in U.S.A.

INTRODUCTION

Melroe recommends that all service technicians attend either field or factory Bobcat Service Workshops for necessary information and education.

Workshops are held many times a year at various locations throughout the U.S. and Canada. Contact your District Service Manager or Melroe Service Office Gwinner, N.D. (701) 678–6165 for schedule.

This Component Repair Manual provides the Service Technician with information for servicing Melroe Hydraulic Cylinders.

Refer to the SERVICE MANUAL for your MODEL Loader to troubleshoot, test, remove and install the hydraulic cylinders.

SAFETY INSTRUCTIONS

We Care About Your Safety.

⚠ WARNING

Wear safety glasses to prevent eye injury when any of the following conditions exist:

- **When fluids are under pressure.**
- **Flying debris or loose material is present.**
- **Engine is running.**
- **Tools are being used.**

W–2019–1285

BEFORE YOU WORK ON THE HYDRAULIC CYLINDER

Read the complete sequence so you know the complete disassembly or assembly procedure before the work is actually started.

⚠ WARNING

Warnings on the machine and in the manuals are for your safety. Failure to obey warnings can cause injury or death.

W–2044–1285

IMPORTANT

This notice identifies procedures which must be followed to avoid damage to the machine.

I–2019–0284

bobcat®

Hydraulic Cylinder
Component Repair Manual

HYDRAULIC CYLINDER

CYLINDER IDENTIFICATION
Tilt Cylinder Components On 753 & 853 7
Tilt Cylinder Components On 753 & 853 8
Tilt Cylinder Components 640 & 740 Series
(Equipped With Cushion Sleeve) 6
Tilt Cylinder Components On 540, 640, *740 Series & 843)
(*Not Equipped With Cushion Sleeve) 5
Tilt Cylinder Components On Farmboy, 440, 443 4
Lift Cylinder Components On All 40 Series 3

HYDRAULIC CYLINDER
Assembly 11
Cylinders With Cushioned Piston 14
Cylinders Without Cushioned Piston 15
Disassembly 9

HYDRAULIC CYLINDER SERVICE TOOLS
MEL1032 Or MEL1033 Rod Seal Tool 1
MEL1075 Adjustable Gland Nut Wrench 1
MEL1178 Seal Tool 2
MEL1076 Cylinder Wrench 2
MEL1074 O–ring Seal Hook 1
MEL1396 Seal Tool 1

TORQUE SPECIFICATIONS
Aluminum Piston 17
Gray Iron Piston 17

bobcat®

Hydraulic Cylinder
Component Repair Manual

HYDRAULIC CYLINDER SERVICE TOOLS

MEL1074 O–ring Seal Hooks

use this tool to remove the seals from the piston and the cylinder head **[A]**.

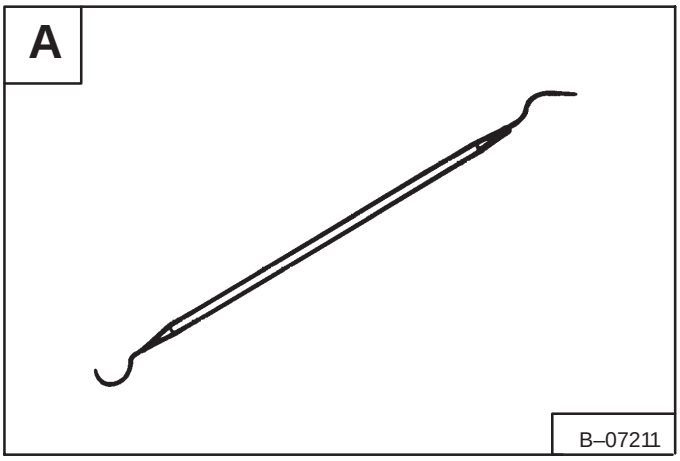

MEL1396 Seal Installation Tool

Use this tool to stretch the Teflon seals before installing seals on cylinder pistons **[B]**.

Use ring compressor to compress the Teflon seal into the groove after installing it on the piston.

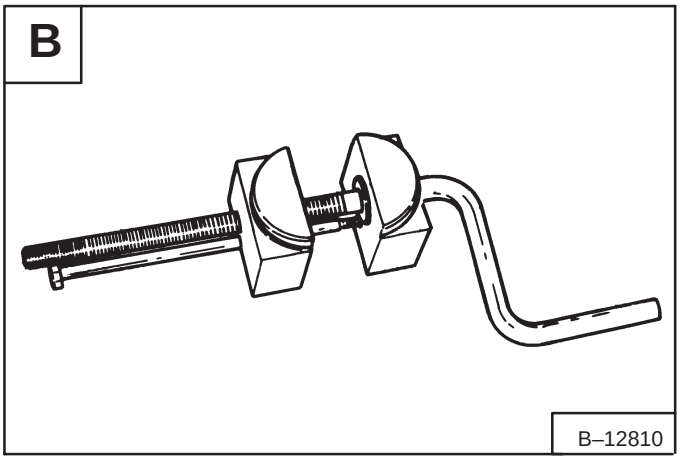

MEL1032 or MEL1033 Rod Seal Installation Tool

Use one of these tools to install internal seals in the cylinder head. Use Tool MEL1033 when servicing cylinders with rods 1–1/4" in diameter through 2" diameter **[C]**.

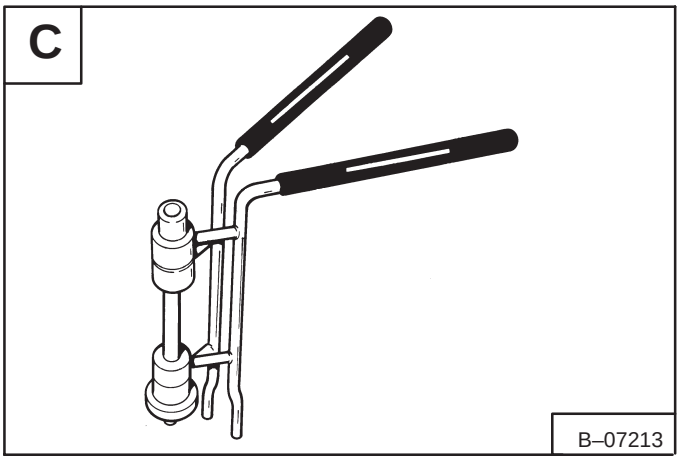

MEL1075 Adjustable Gland Nut Wrench

Use this tool with correct pins (Tool MEL1075–1 or MEL1075–2) for the cylinder head removal and installation **[D]**.

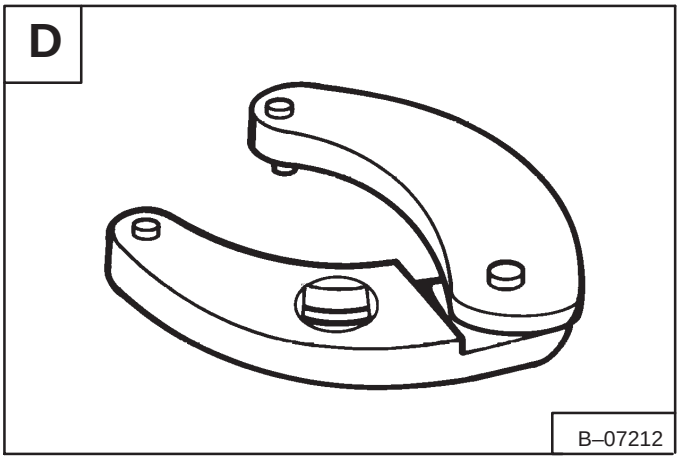

HYDRAULIC CYLINDER SERVICE TOOLS (Cont'd)

MEL1076 Cylinder Wrench

Use this tool to remove the end cap from the hydraulic cylinder **[A]**.

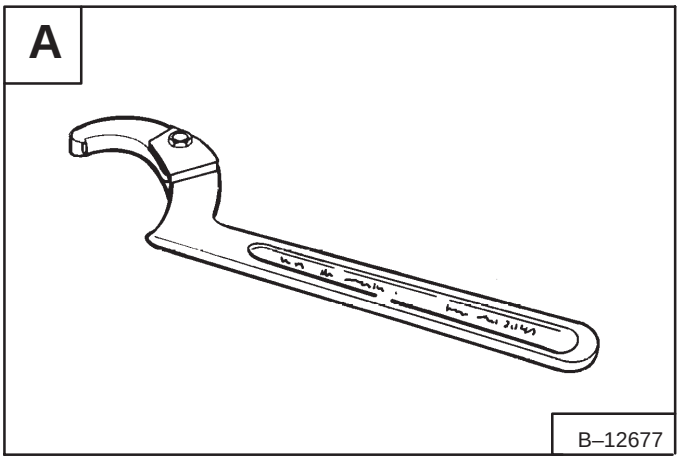

CYLINDER IDENTIFICATION

Lift Cylinder Components on All 40 Series

1. Rod
2. Case
3. Nut
4. Piston
5. Piston Seal
6. O–ring
7. Spacer
8. O–ring
9. Back–Up Washer
10. Head
11. Rod Seal
12. Wiper Seal

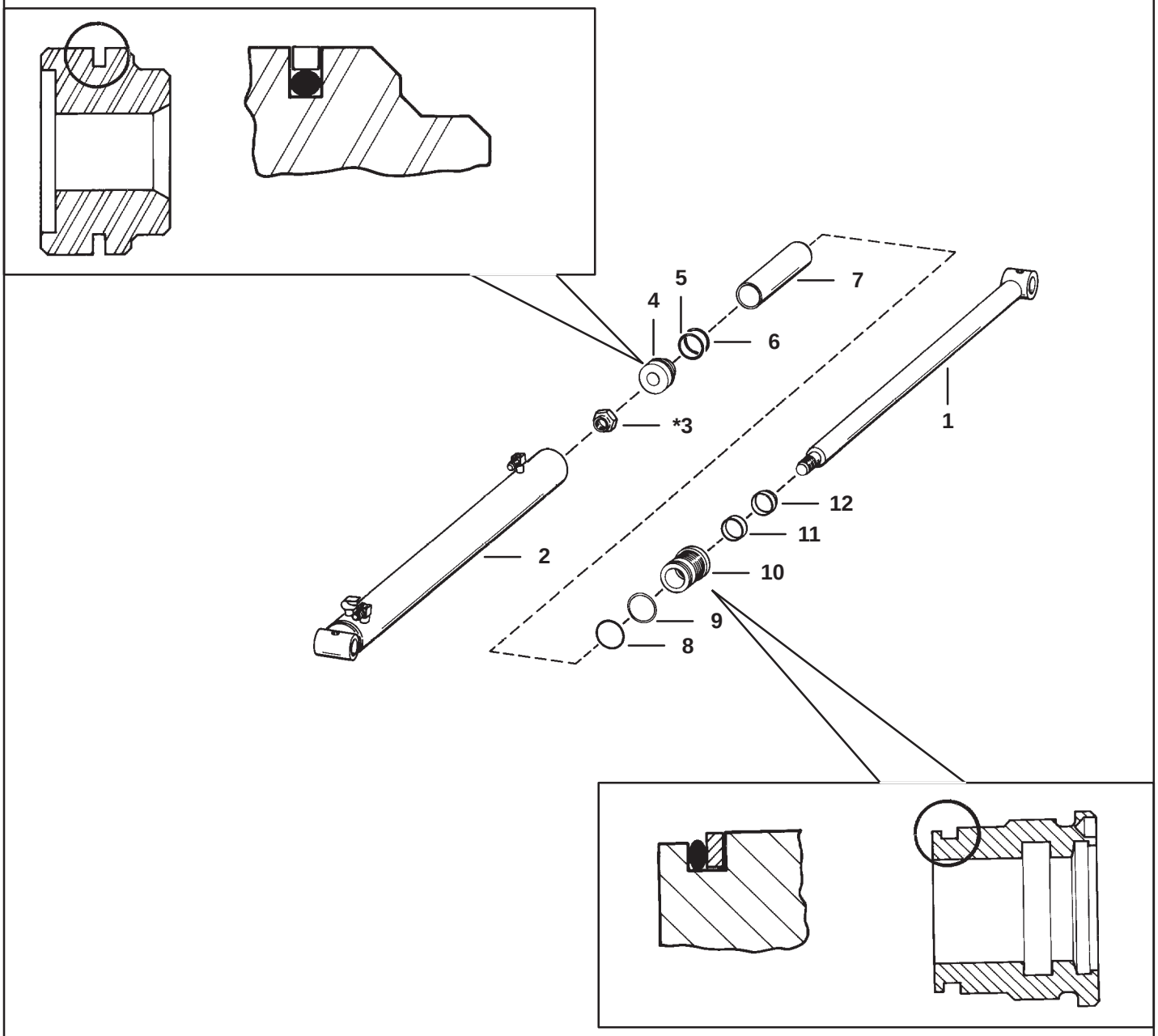

*** See Page 17 for torque**

B–06942

Tilt Cylinder Components on farmboy, 440, 443

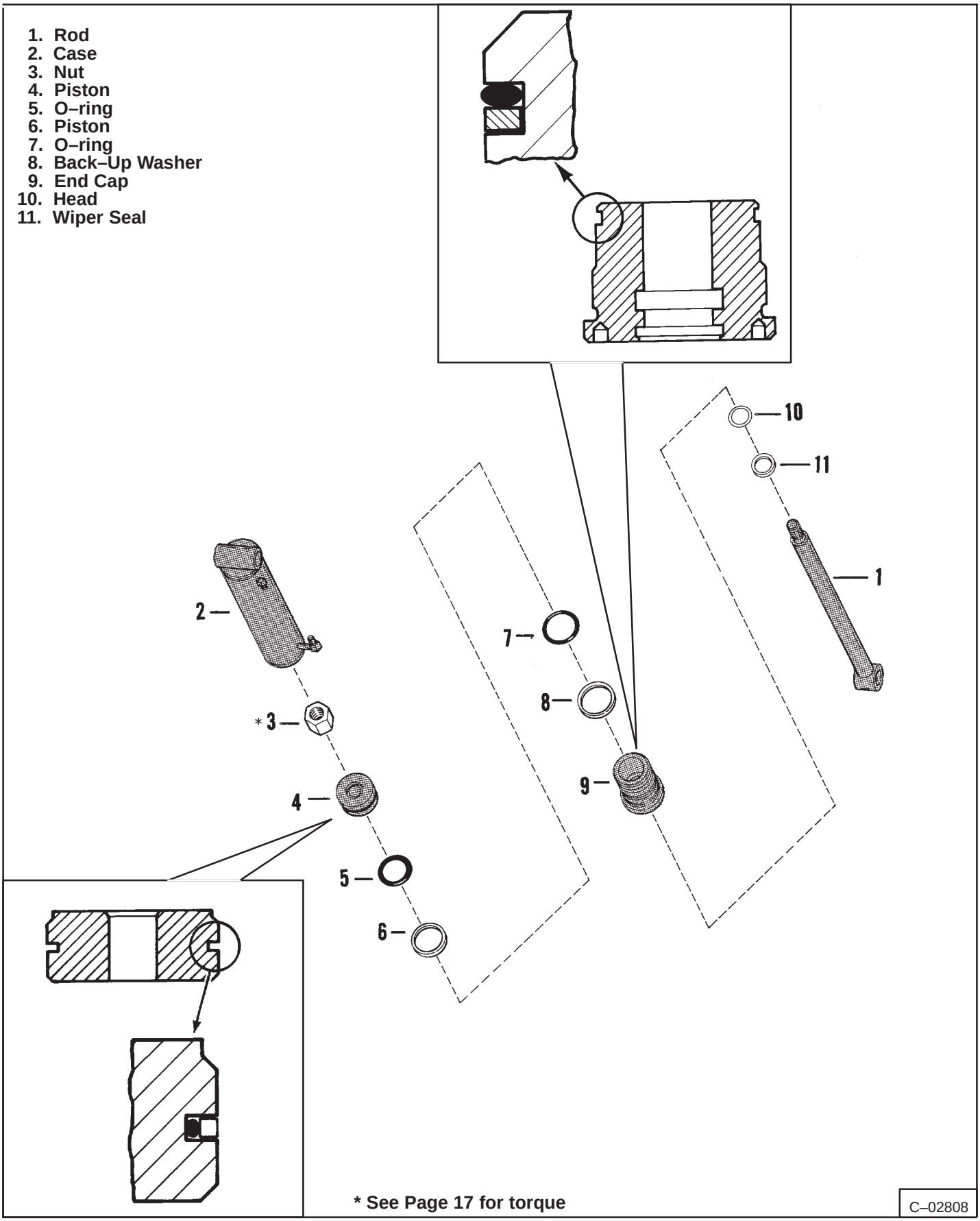

Tilt Cylinder Components on 540, 640, 740* Series & 843
(* Not Equipped With Cushion Sleeve)

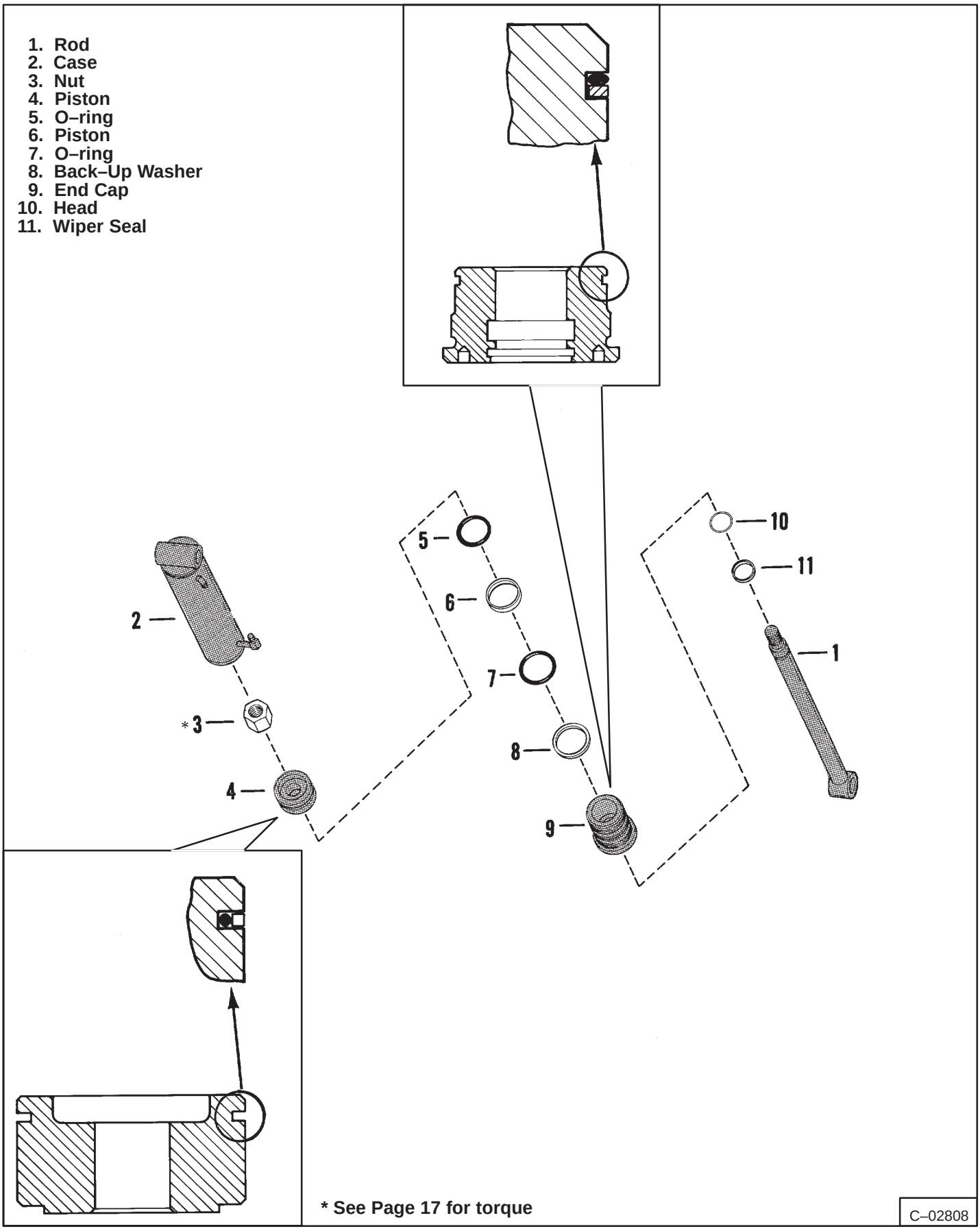

Tilt Cylinder Components on 640* & 740* Series
(* Equipped With Cushion Sleeve)

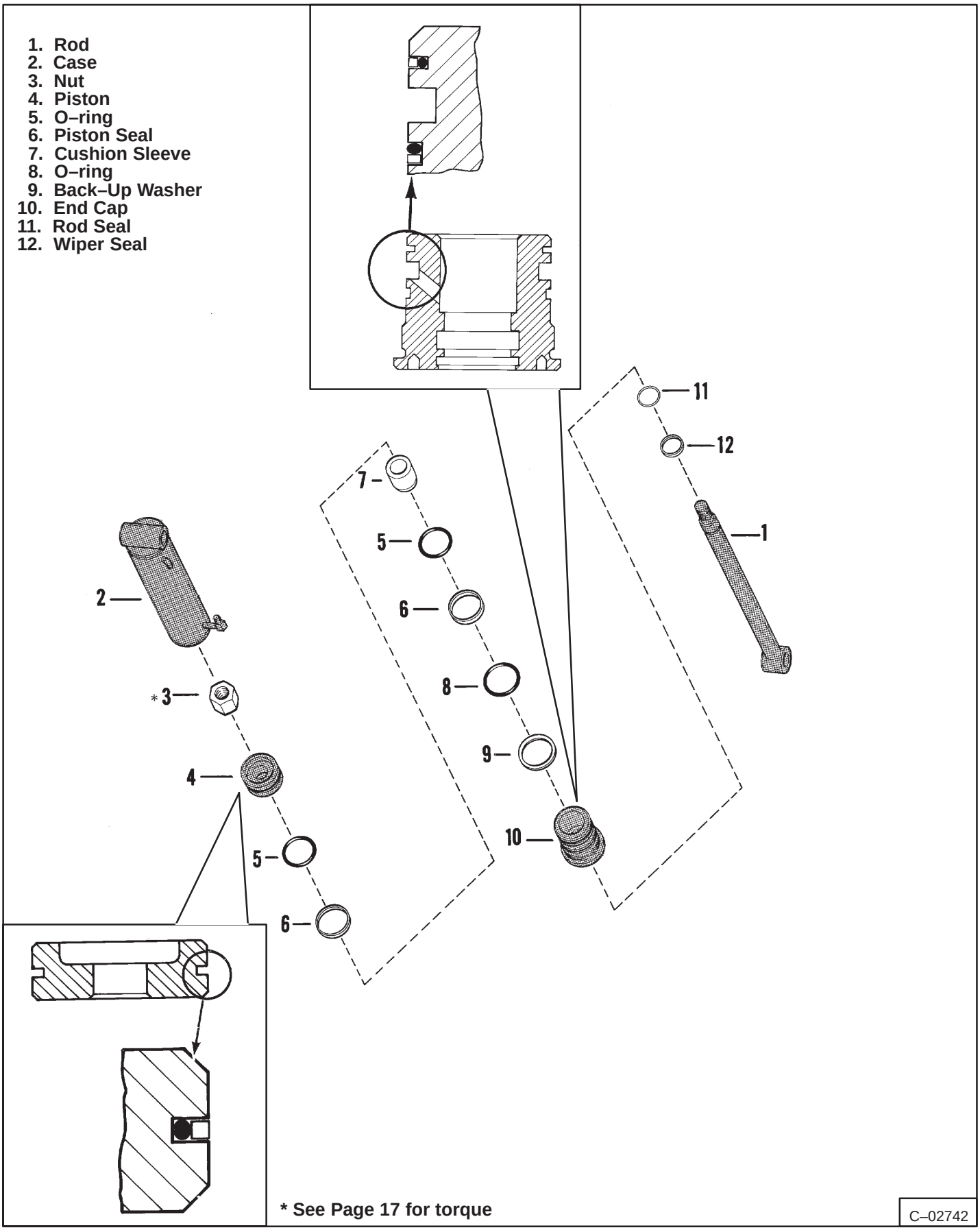

* See Page 17 for torque

CYLINDER IDENTIFICATION (Cont'd)

Tilt Cylinder Components on 753 & 853

1. Case
2. Tube
3. Plug
4. O–ring
5. Bolt
6. Clamp
7. Nut
8. Piston
9. Seal
10. O–ring
11. O–ring
12. Washer
13. O–ring
14. Head
15. Seal
16. Seal
17. Rod
18. Bushing

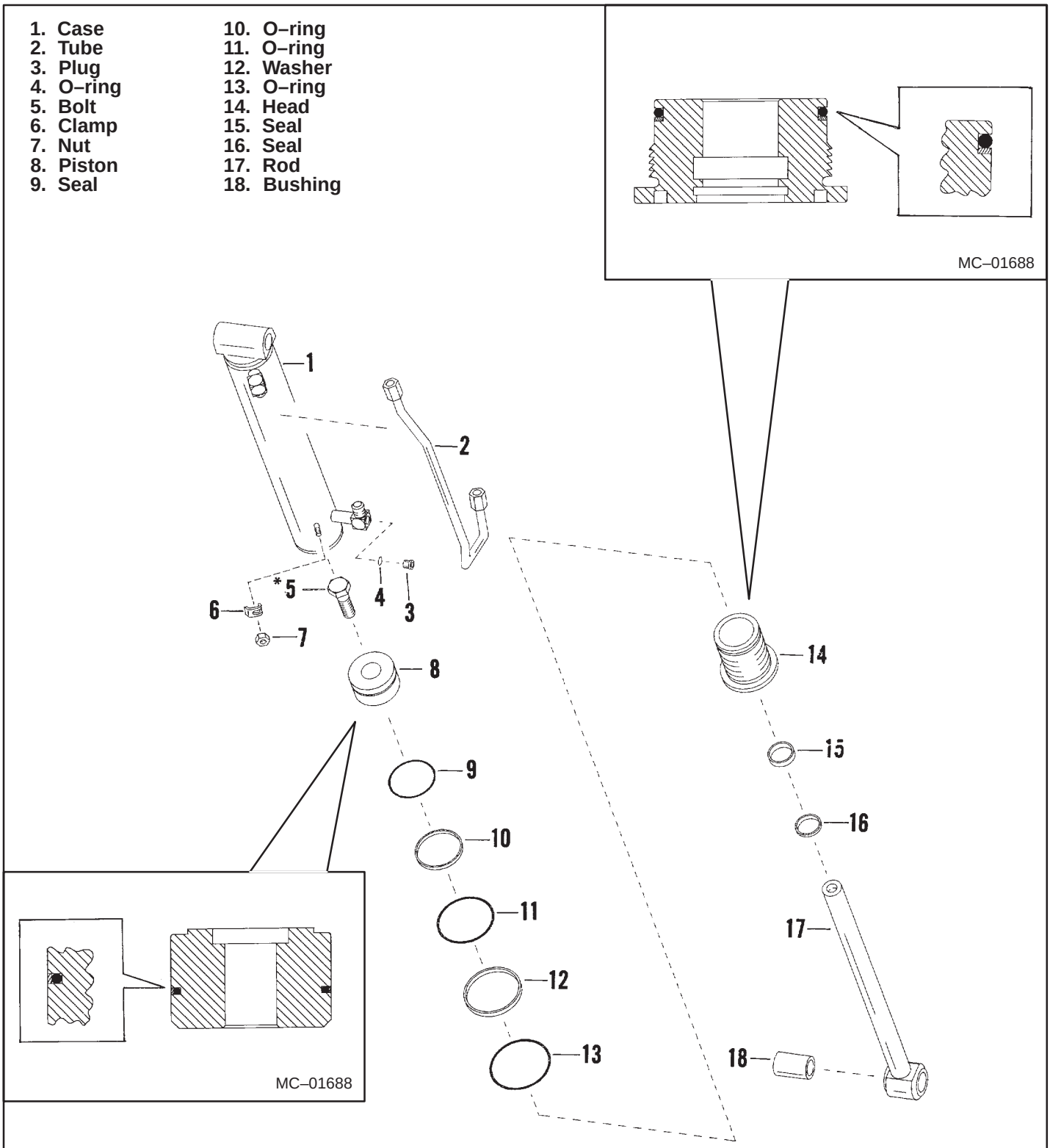

*** Tighten to 400–425 ft.–lbs. (543–577 Nm) torque**

TS–01012

Tilt Cylinder Components on 753 & 853

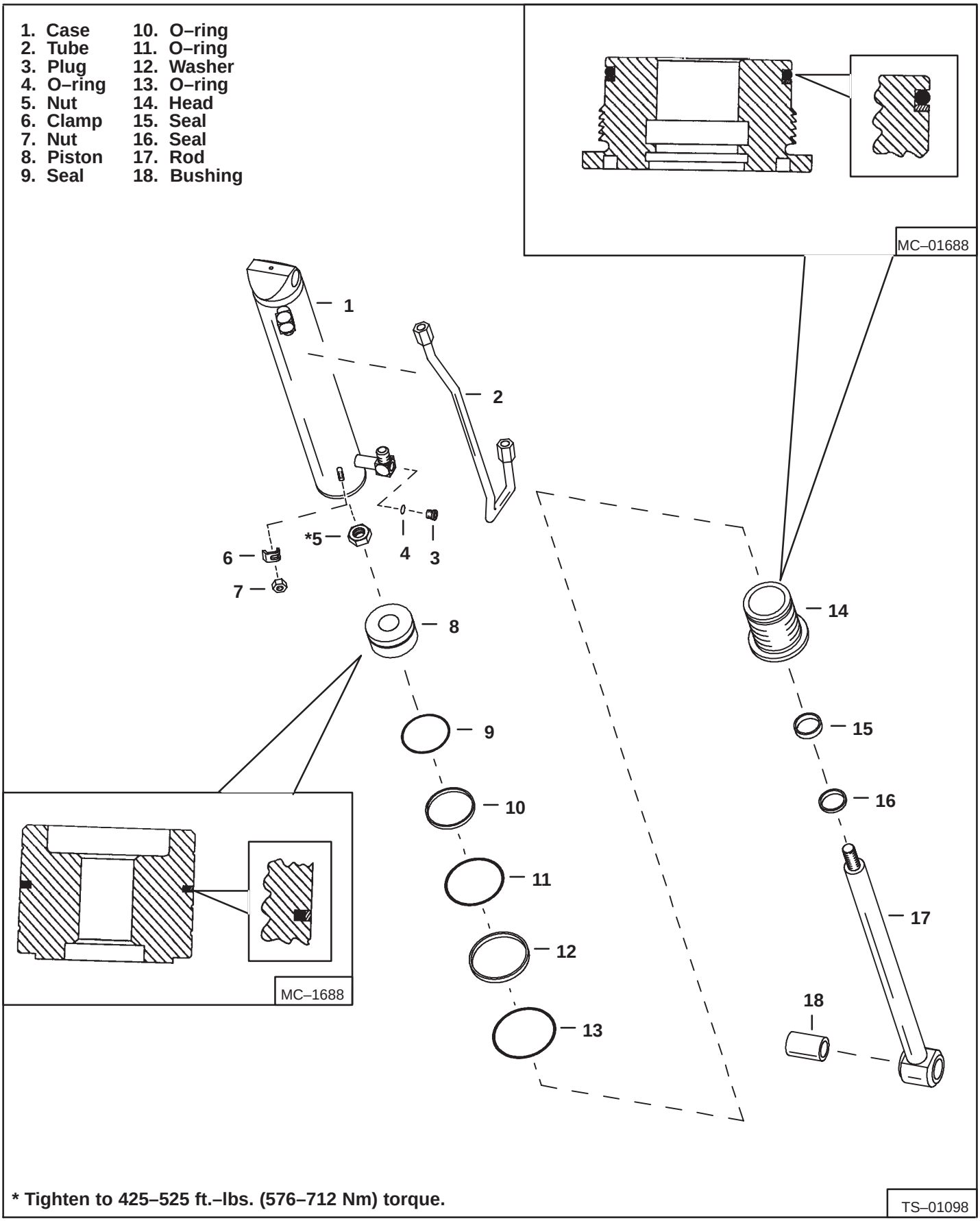

*** Tighten to 425–525 ft.–lbs. (576–712 Nm) torque.**

HYDRAULIC CYLINDER (Cont'd)

Disassembly

NOTE: The drawings may not show the cylinder exactly as it appears, but the procedure is correct for all cylinders.

See the Service Manual for your model loader to find the correct information for removing and installing the cylinder.

Put the base end of the hydraulic cylinder in a drain pan. Move the rod in and out to remove the fluid from the cylinder. Move the rod slowly so the fluid will go directly into the drain pan.

Put the base end of the cylinder in a vise.

Use the adjustable gland nut wrench to loosen the head **[A]**.

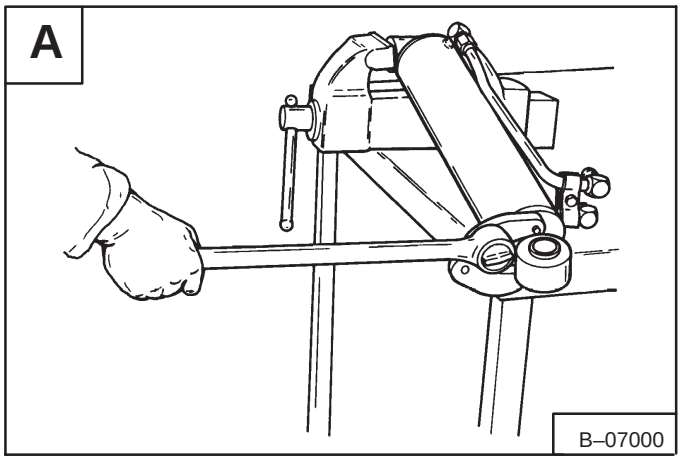

Remove the rod assembly from the cylinder case **[B]**.

Remove the cylinder case from the vise.

Put the rod end in the vise.

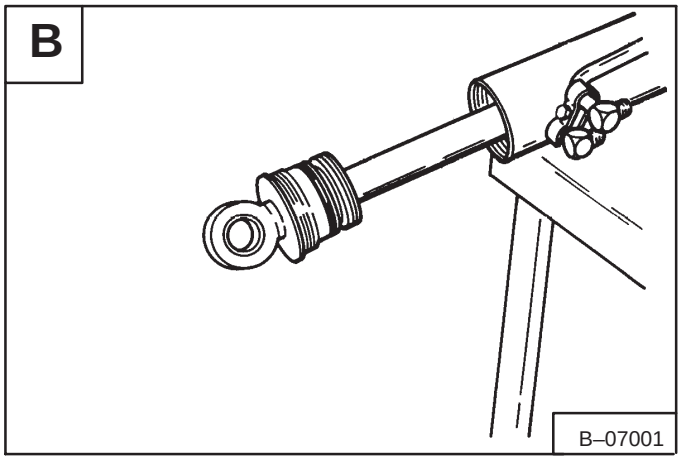

Remove the nut from the piston end of the rod **[C]**.

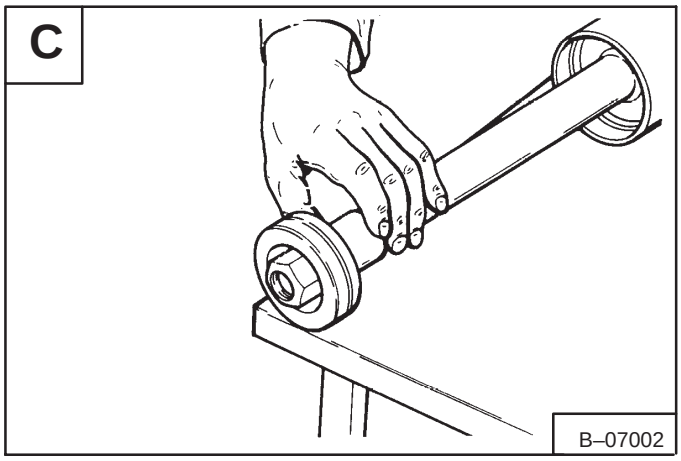

Pull the piston off the rod (Item 1) **[D]**.

If the cylinder has a cushion sleeve (Item 2) **[D]**, pull it off the rod.

Pull the head (Item 2) **[D]** off the rod.

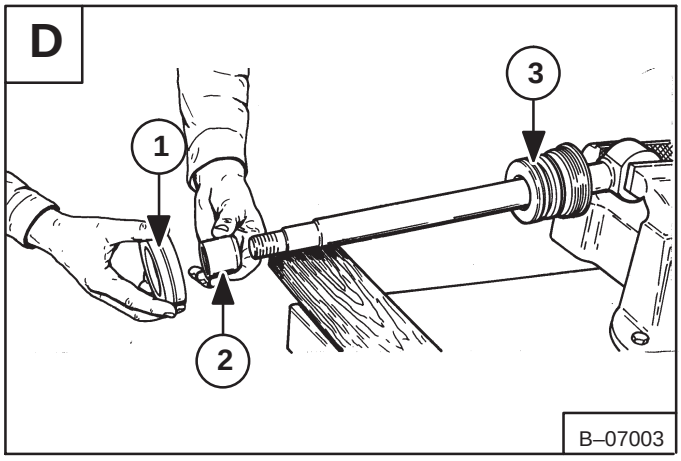

HYDRAULIC CYLINDER (Cont'd)

Disassembly (Cont'd)

If the head has a seal, remove the seal from the head **[A]**.

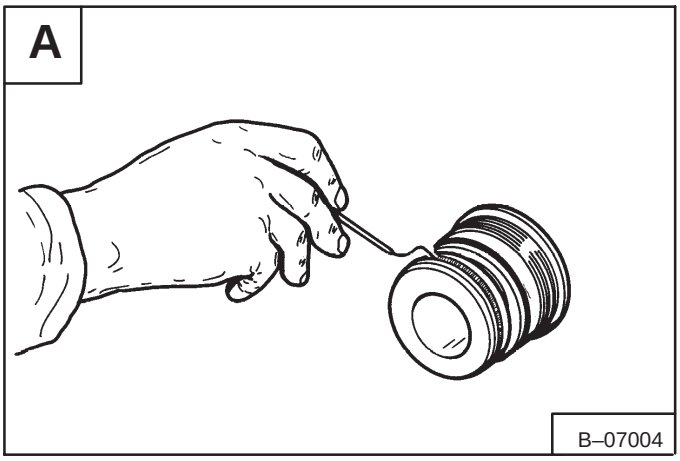

Remove the O–ring and back–up washer from the head **[B]**.

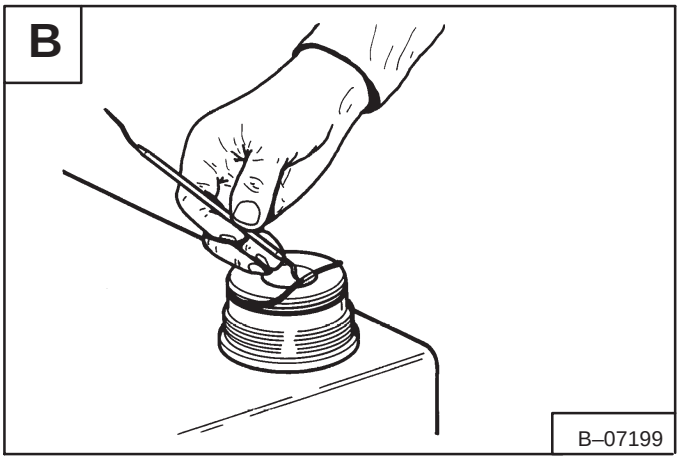

Remove the wiper seal **[C]**.

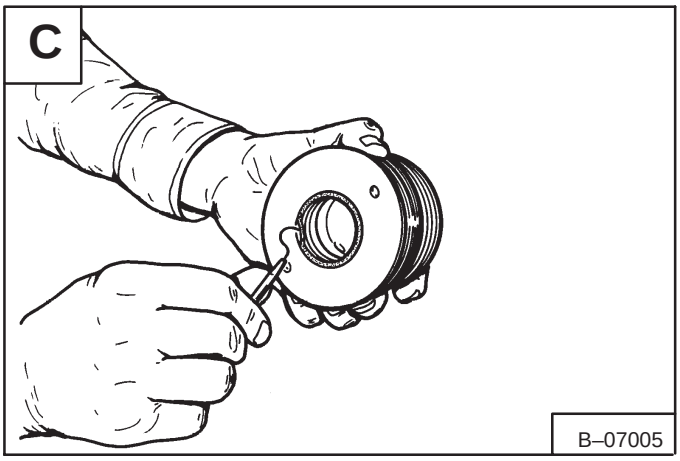

Remove the oil seal from the head **[D]**.

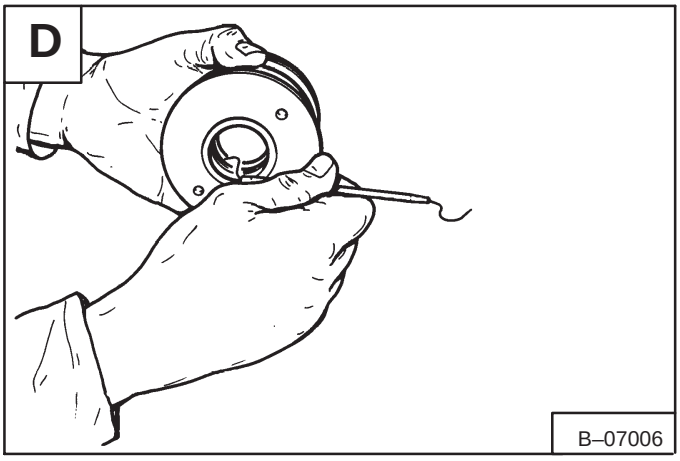

HYDRAULIC CYLINDER (Cont'd)

Disassembly (Cont'd)

Remove the piston seal from the piston **[A]**.

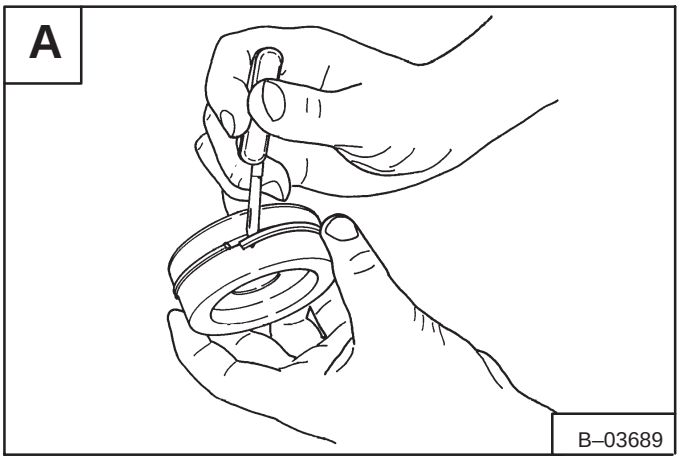

Remove the O–ring from the piston **[B]**.

Wash the cylinder parts in solvent and air dry them.

While servicing the cylinder do not damage the parts. Inspect for nicks, scratches or otherwise damaged or bent parts before assembling the cylinder. Replace parts that appear damaged in any way. The cylinder may not function correctly if there is damage to any of the parts.

Destroy all the O–rings and seals and replace them with NEW O–rings and seals.

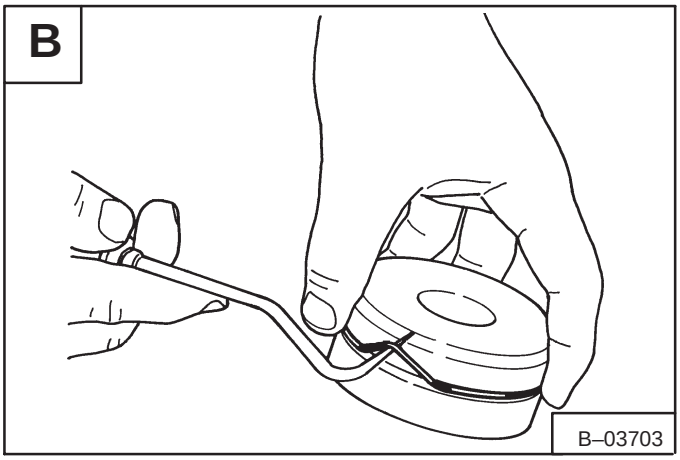

Assembly

Install the O–ring on the piston **[C]**.

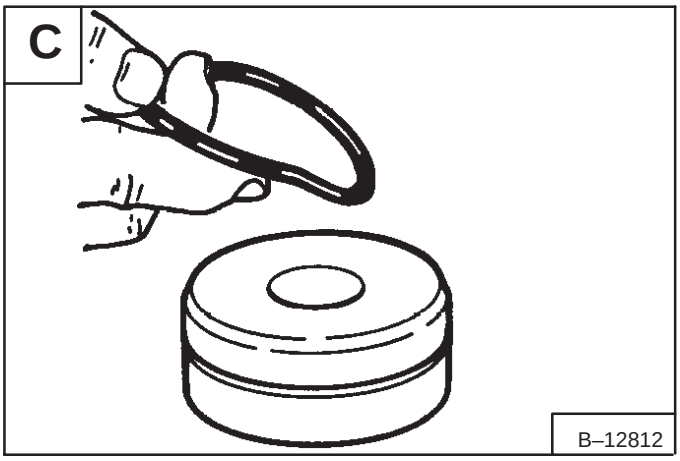

NOTE: Do not overstretch the seal.

Install the seal on the tool and stretch it until it fits the piston **[D]**.

Allow the O–ring to stretch for 30 seconds before removing it from the tool.

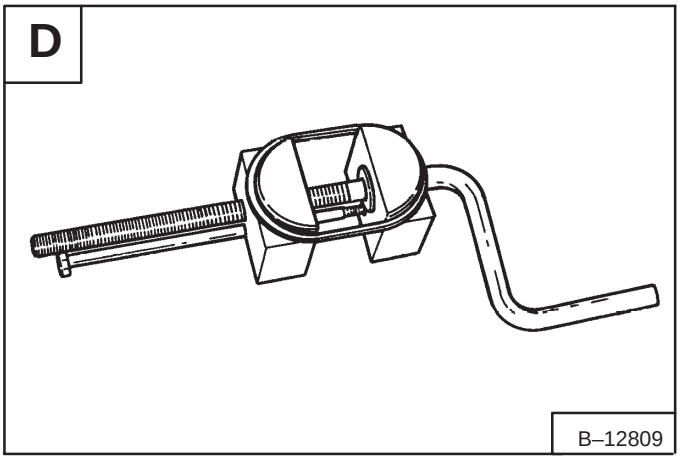

HYDRAULIC CYLINDER (Cont'd)

Assembly (Cont'd)

Install the seal on the piston **[A]**.

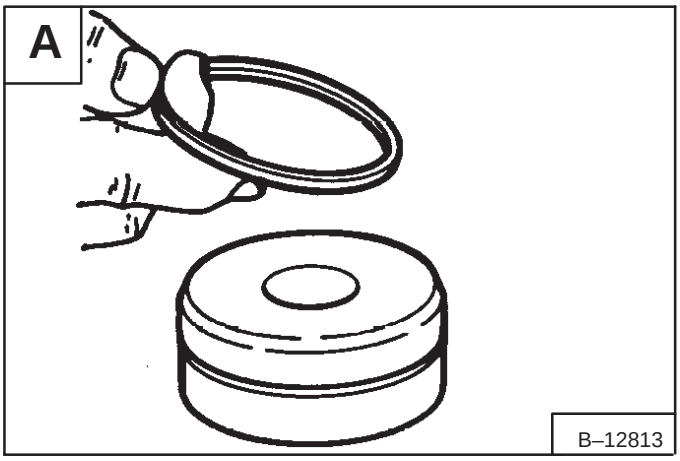

Use a ring compressor to compress the seal to the correct size **[B]**.

Leave the piston in the ring compressor for three minutes.

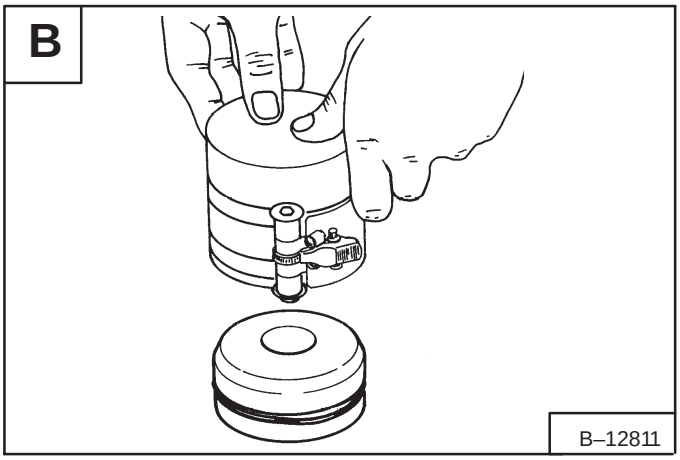

Install the oil seal on the rod seal tool **[C]**.

NOTE: The O–ring side of the oil seal goes toward the inside of the cylinder.

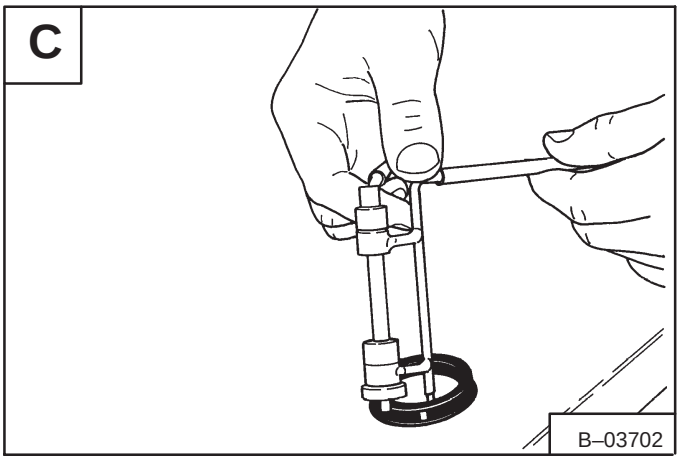

Install the oil seal in the head **[D]**.

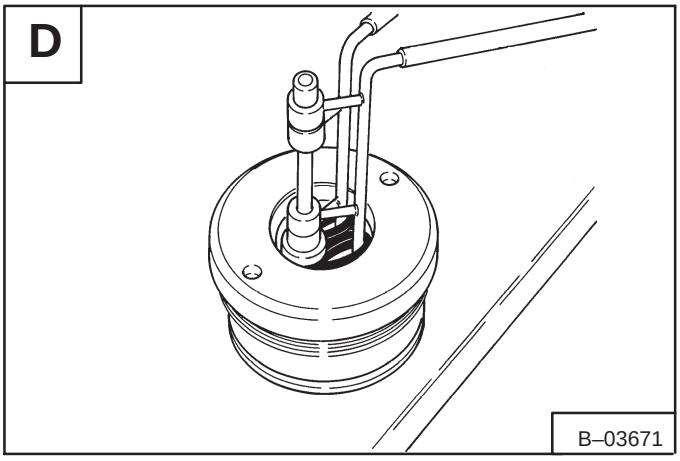

HYDRAULIC CYLINDER (Cont'd)

Install the wiper seal with the lip toward the outside of the head **[A]**.

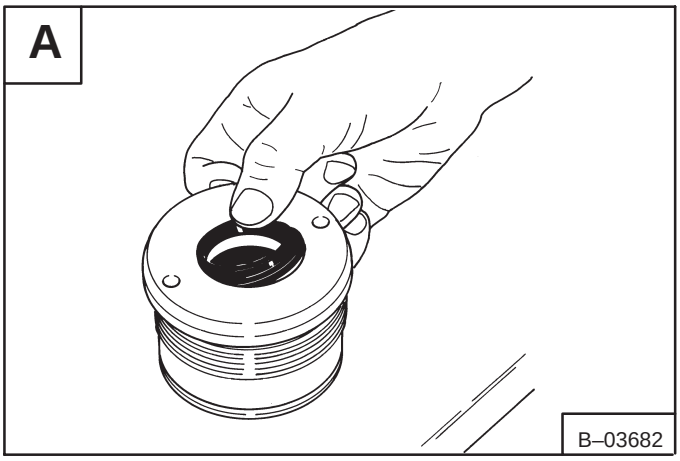

Install the back–up washer on the head **[B]** & **[C]**.

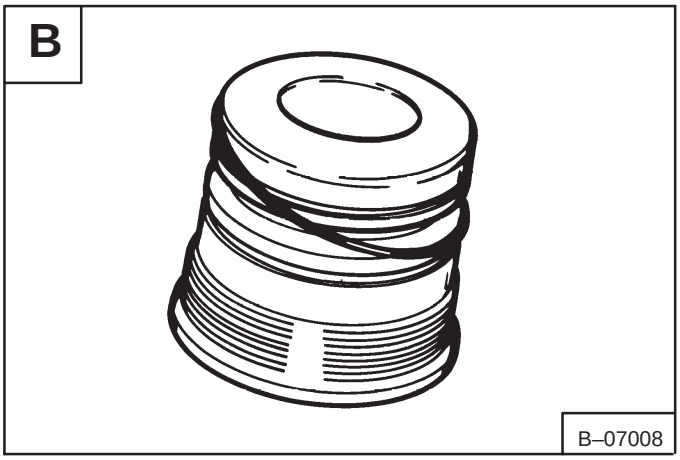

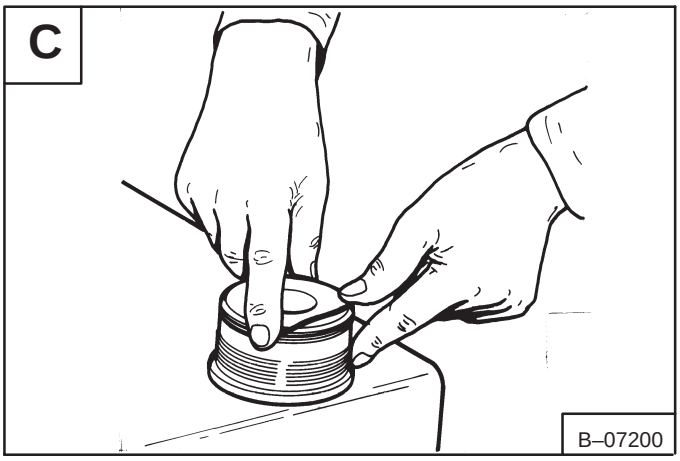

Install the O–ring next to the back–up ring **[D]**.

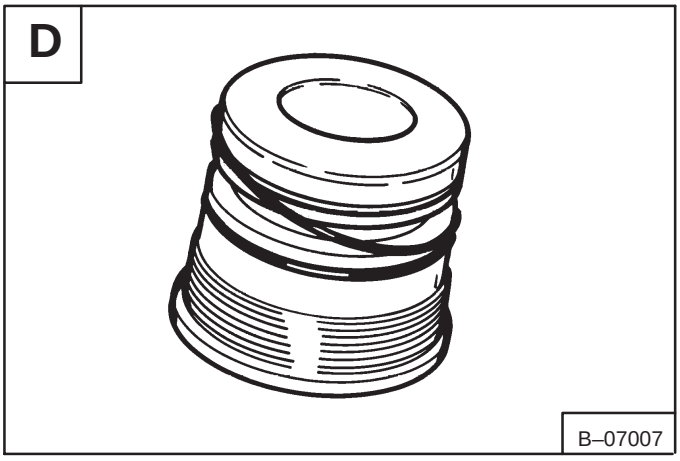

HYDRAULIC CYLINDER (Cont'd)

If a seal was removed from the head, use the following procedure to install a new one.

Install the guide (with a pilot and an adapter if they are required (See Special Tools Page 1) on the head.

Install the seal on the head using the guide **[A]**.

NOTE: Do not turn (roll) the seal as you install it. Damage to the seal may result.

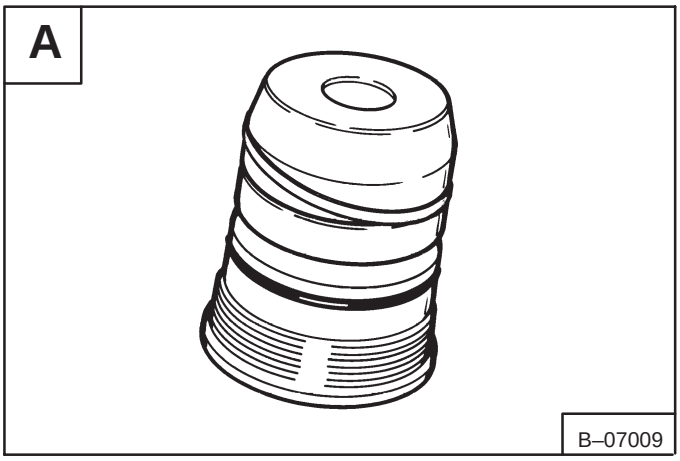

Use a ring compressor to compress the seal to the correct size **[B]**.

Leave the tool over the Teflon seal for five minutes.

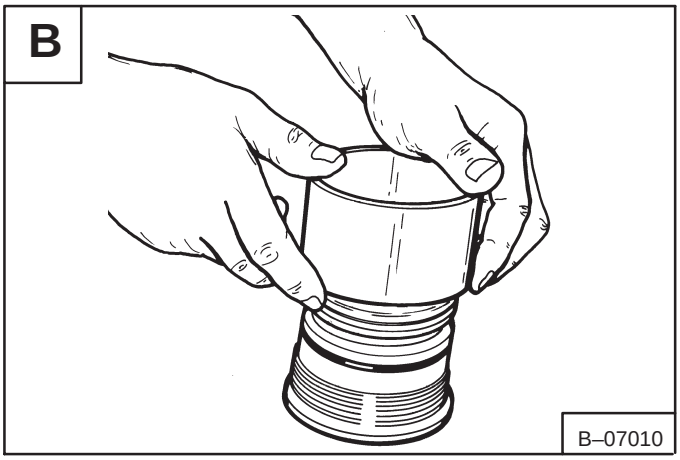

Install the head on the rod **[C]**.

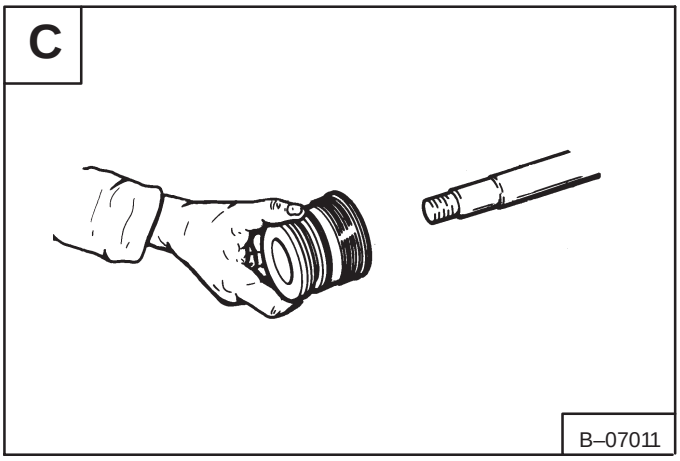

Cylinder Without Cushioned Piston

Install the piston on the rod with the tapered end first (toward the head) **[D]**.

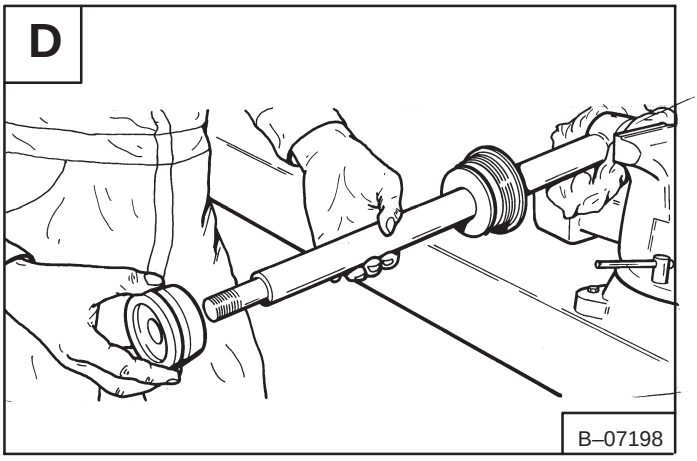

HYDRAULIC CYLINDER (Cont'd)

Cylinders With Cushioned Piston:

Install the cushion sleeve and the piston on the rod **[A]**.

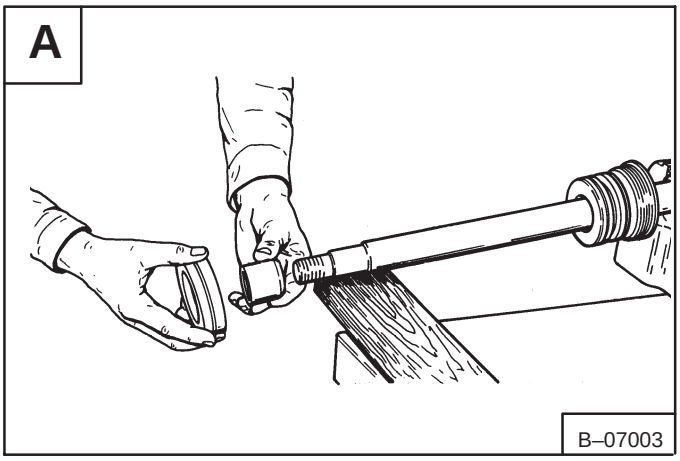

Lubricate the threads and install the nut **[B]**.

See Page 17 for the correct torque specifications.

Remove the rod from the vise.

Install the cylinder case in the vise.

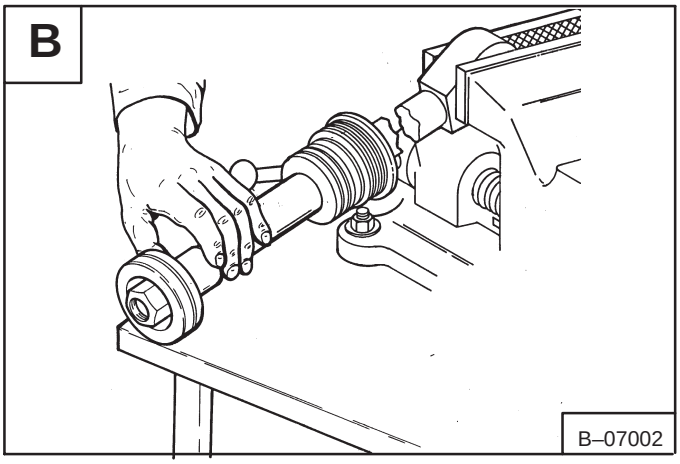

Put oil on the seal surface of the cylinder case **[C]**.

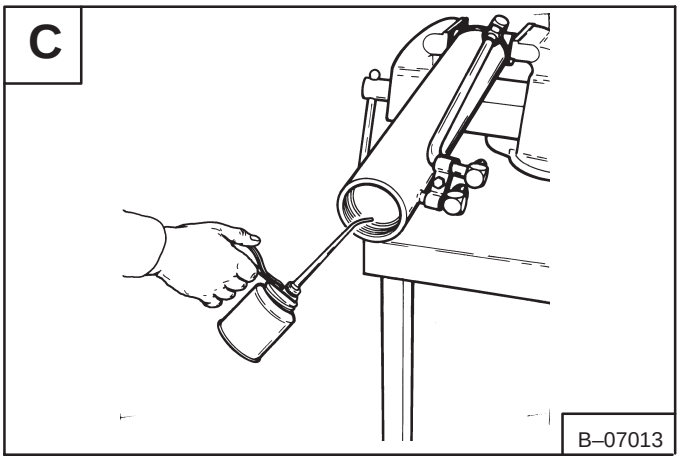

Put oil on the Teflon seal on the piston **[D]**.

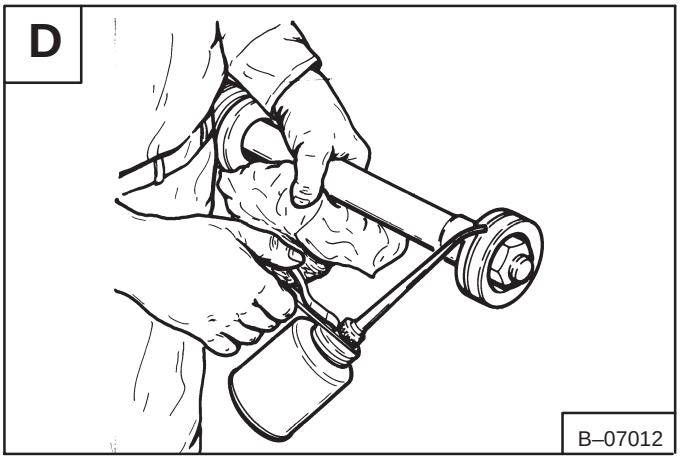

HYDRAULIC CYLINDER (Cont'd)

Install the rod assembly in the cylinder case **[A]**.

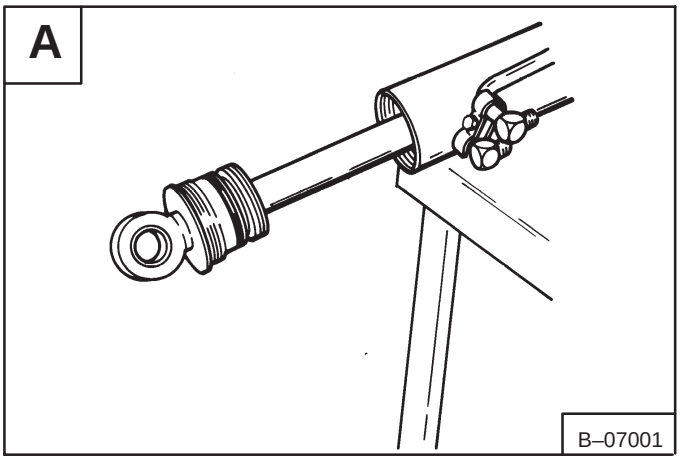

On the head, put oil on the seals and threads **[B]**.

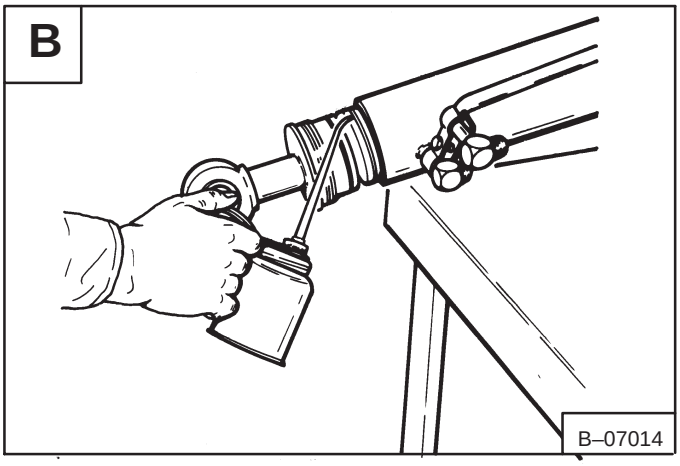

Use the adjustable gland nut wrench to tighten the head **[C]**.

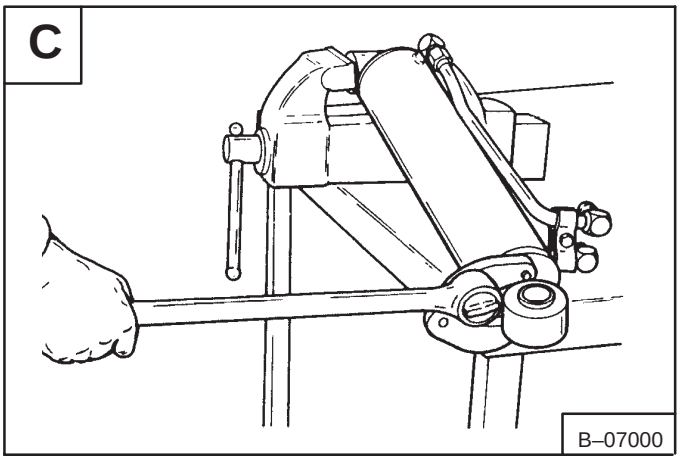

Replace the seal on the rod end (if so equipped) if it shows signs of wear or damge **[D]**.

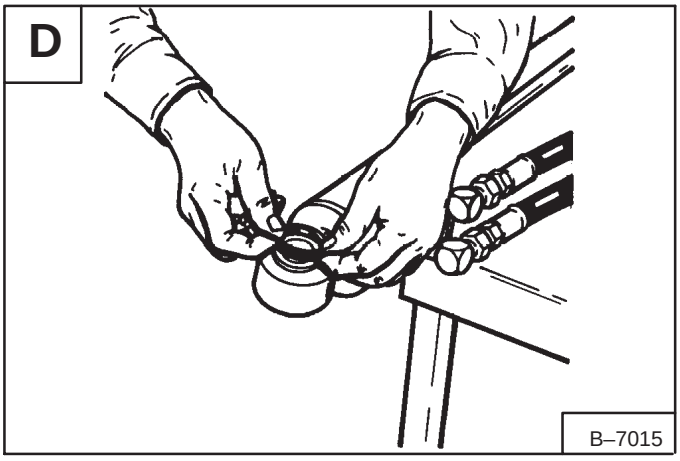

TORQUE SPECIFICATIONS

All torques shown are for lubricated threads.

Aluminum Piston	Ft.–Lbs.	Nm
Boom Cylinder (Trencher)	100–111	135–150
3/4” Thread	150–160	205–217
7/8” Thread	170–210	230–285
1”	330–360	447–488
1–1/8” Thread	330–360	447–488
Gray Iron Piston		
7/8” Thread	250–300	340–407
1–1/8” Thread	470–550	637–746
1–1/4” Thread	700–800	949–1085
1–1/2” Thread	800–900	1085–1220
2” Thread	1800–2200	2440–2983

bobcat®

Hydraulic Cylinder
Component Repair Manual